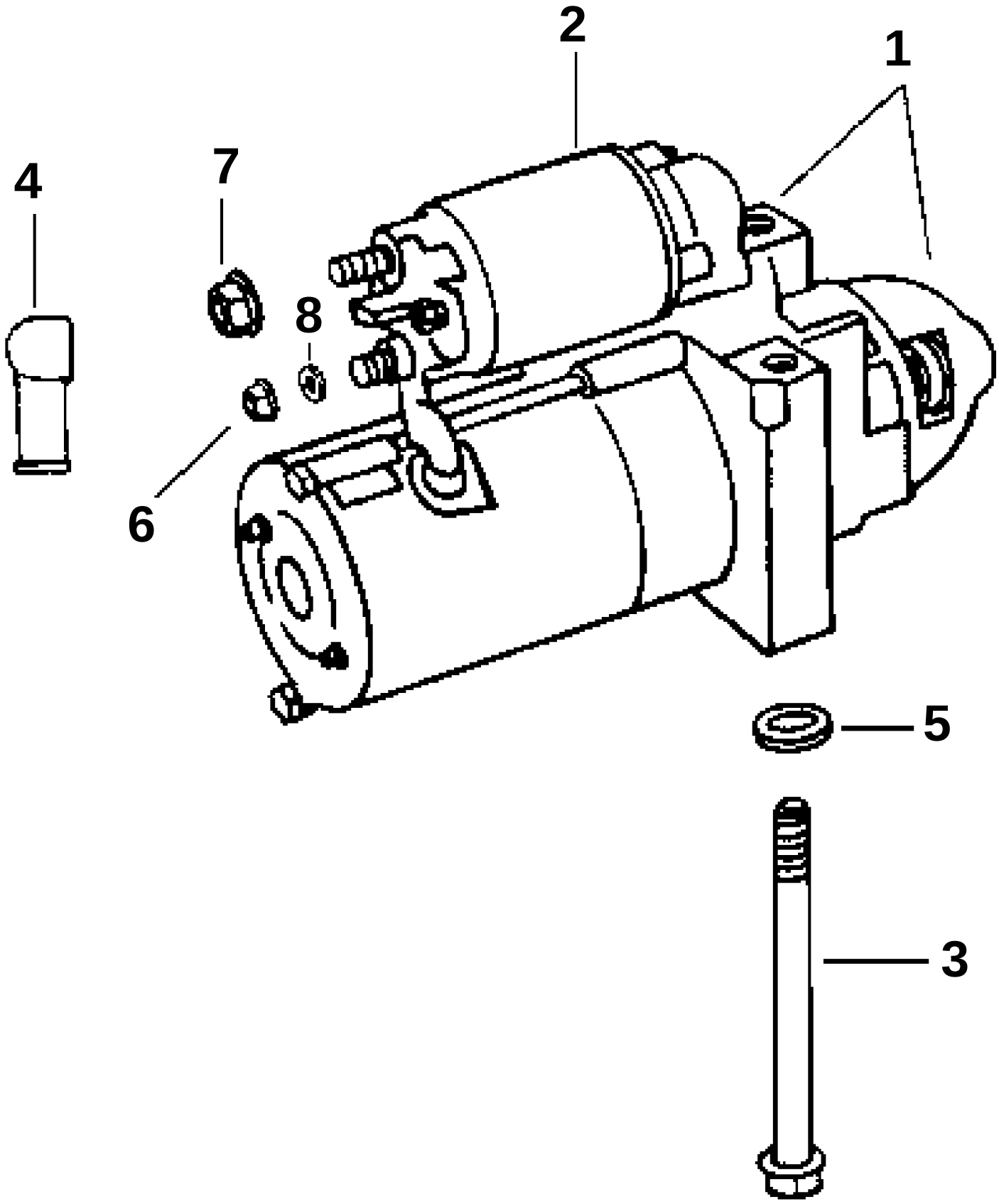

GR71060

STARTER MOTOR

REF	PART NO.	QTY	DESCRIPTION	NOTES
1	3856004	1	Starter motor, Engine	
2	3850216	1	· Solenoid	
3	3854752	2	· Screw, Starter motor to engine	WTC
	3857936	2	· Screw, Starter motor to engine	WTR
4	3852487	1	· Protective cap, Battery cable	
5	3854496	2	· Washer, Screw, starter motor to engine block	
6	3852518	2	· Nut, Starter solenoid	
7	3853714	1	· Nut, Battery cable to starter solenoid	
8	3852520	2	· Washer, Stud, starter solenoid	
	3852194	1	Screw, Ground, relay, starter	Not shown